TDA7240A

20W BRIDGE AMPLIFIER FOR CAR RADIO

- COMPACT HEPTAWATT PACKAGE
- FEW EXTERNAL COMPONENTS
- OUTPUT PROTECTED AGAINST SHORT CIRCUITS TO GROUND AND ACROSS LOAD
- DUMP TRANSIENT
- THERMAL SHUTDOWN
- LOUDSPEAKER PROTECTION
- HIGH CURRENT CAPABILITY
- LOW DISTORTION/LOW NOISE

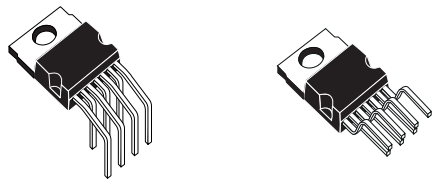

Heptawatt H **Heptawatt V**

ORDERING NUMBERS:

TDA7240AH TDA7240AV

DESCRIPTION

The TDA7240A is a 20W bridge audio amplifier IC designed specially for car radio applications. Thanks to the low external part count and compact Heptawatt 7-pin power package the TDA7240A occupies little space on the printed circuit board.

Reliable operation is guaranteed by a comprehensive array of on-chip protection features. These include protection against AC and DC output short circuits (to ground and across the load), load dump transients, and junction overtemperature. Additionally, the TDA7240A protects the loudspeaker when one output is short-circuited to ground.

Figure 1: Test and Application Circuit

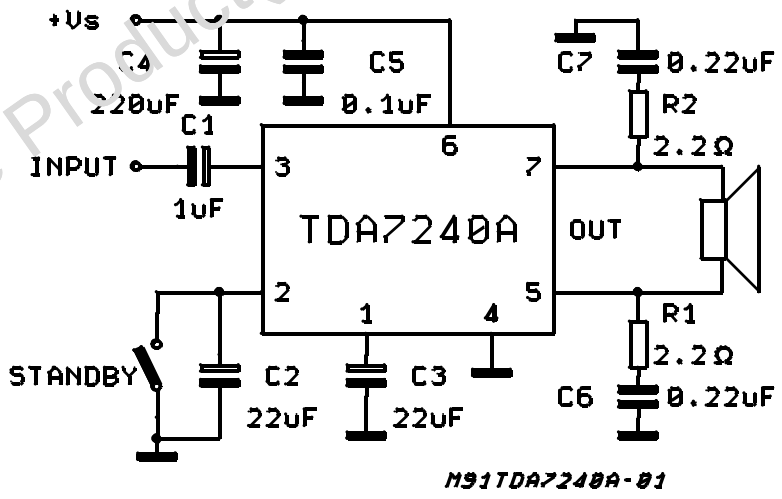

Obsolete Product(s) - Obsolete Product(s)

PIN CONNECTION (Top view)

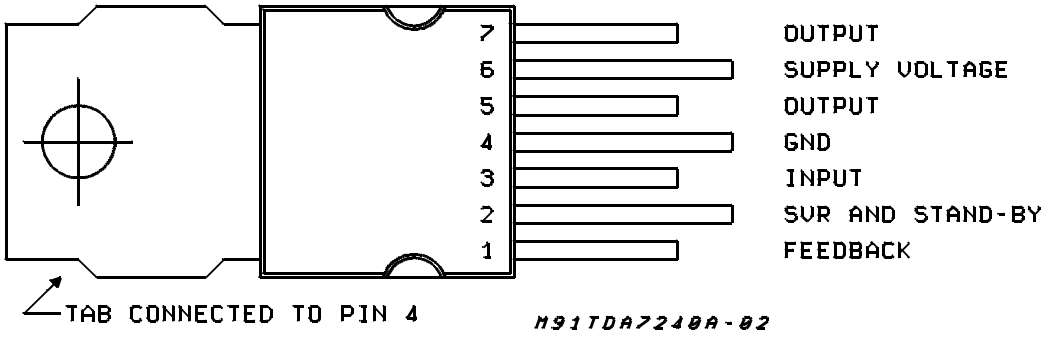

ABSOLUTE MAXIMUM RATINGS

Symbol	Parameter	Value	Unit
V_s	Operating Supply Voltage	18	V
V_s	DC Supply Voltage	28	V
V_s	Peak Supply Voltage (for 50ms)	40	V
I_o (*)	Peak Output Current (non repetitive t = 0.1ms)	4.5	A
I_o (*)	Peak Output Current (repetitive f ≥10Hz)	3.5	A
P_{tot}	Power Dissipation at Tcase = 85°C	16	W
T_{stg}, T_j	Storage and Junction Temperature	–40 to 150	°C

(*) Internally limited

THERMAL DATA

Symbol	Parameter	Value	Unit
$R_{th\ j\text{-}case}$	Thermal Resistance Junction-case Max.	4	V

ELECTRICAL CHARACTERISTICS (refer to the circuit of fig. 1, T_{amb} = 25°C, R_{th} (heatsink) = 4°C/W, V_S = 14.4V)

Symbol	Parameter	Test Conditions	Min.	Typ.	Max.	Unit
V_s	Supply Voltage				18	V
V_{os}	Output Offset Voltage				150	mV
I_d	Total Quiescent Current	$R_L = 4\Omega$		65	120	mA
P_o	Output Power	f = 1kHz; d = 10% $R_L = 4\Omega$ $R_L = 8\Omega$	 18 10	 20 12		 W W
d	Distortion	$R_L = 4\Omega$ f = 1kHz P_o = 50mW to 12W		0.1	0.5	%
		$R_L = 8\Omega$ f = 1kHz P_o = 50mW to 12W		0.05	0.5	%
GV	Voltage Gain	f = 1KHz	39.5	40	40.5	dB
SVR	Supply Voltage Rejection	f = 100Hz $R_g = 10K\Omega$	35	40		dB
E_N	Total Input Noise	$R_g = 10K\Omega$ (*) (**)		 2 3	 10	 µV µV
η	Efficiency	$R_L = 4\Omega$ f = 1KHz		65		%
I_{sb}	Stand-by Current			200		µA
R_i	Input Resistance	f = 1kHz	70			kΩ
V_i	Input Sensitivity	f = 1kHz; P_o = 2W; $R_L = 4\Omega$		28		mV
f_L	Low Frequency Roll Off (–3dB)	Po = 15W; $R_L = 4\Omega$			30	Hz
f_H	High Frequency Roll Off (–3dB)	Po = 15W; RL = 4Ω	25			kHz
A_s	Stand-by Attenuation	V_o = 2Vrms	70	90		dB
$V_{TH\ (pin2)}$	Stand-by Threshold				1	V

(*) B= Curve A (**) B = 22Hz to 22 KHz

Figure 2 : P.C. Board and Components layout of the Circuit of Fig. 1.(1:1scale)

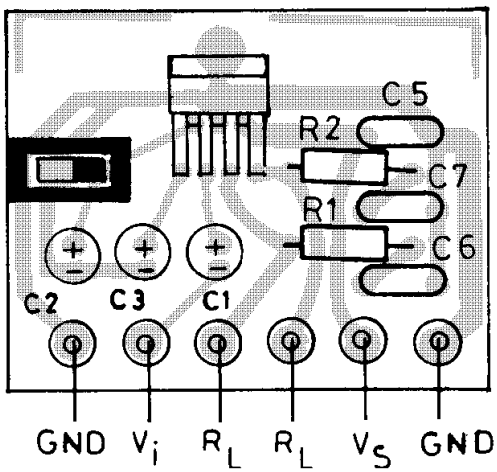

APPLICATION SUGGESTION

The recommended values of the components are those shown on application circuit of Fig. 1. Different values can be used, the following table can help the designer.

Component	Recommended Value	Purpose	Larger Than	Smaller Than
R1, R2	2.2Ω	Frequency Stability	Danger of High Frequency Oscillation	
C1	1µF	Input DC Decoupling	Higher Turn On and Stand-by Delay	Higher Turn On Pop. Higher Low Frequency Cutoff
C2	22µF	Ripple Rejection	Increase of SVR Increase of the Turn On Delay	Degradation of SVR
C3	22µF	Feedback low Frequency Cutoff		Higher Low Frequency Cutoff
C6, C7	0.22µF	Frequency Stability		Danger of Oscillation
C4	220µF	Supply Filter		Danger of Oscillation
C5	0.1µF	Supply Bypass		Danger of Oscillation

Figure 3 : Output Power vs. Supply Voltage.

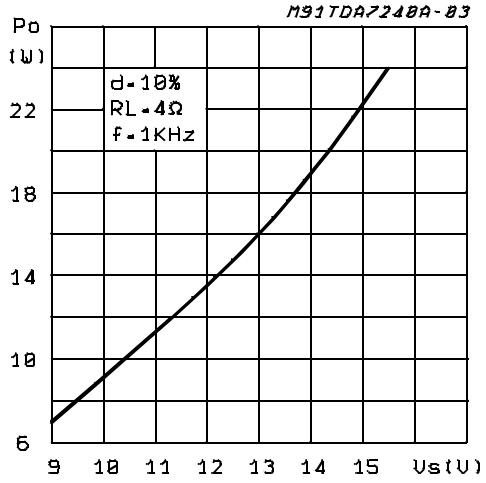

Figure 4 : Distortion vs. Output Power.

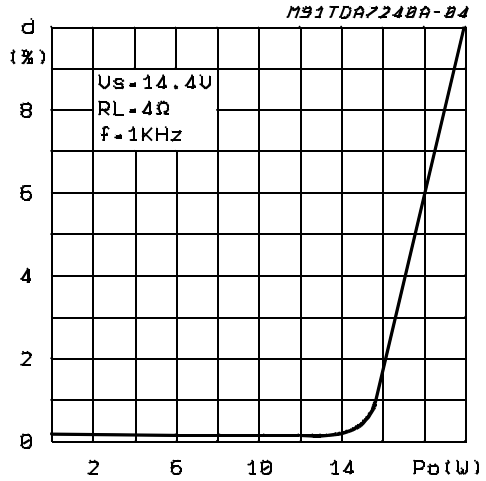

Figure 5 : Output Power vs. Supply voltage.

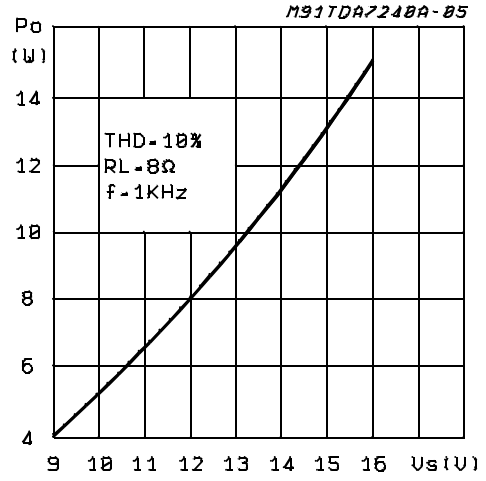

Figure 6 : Distortion vs. Output Power.

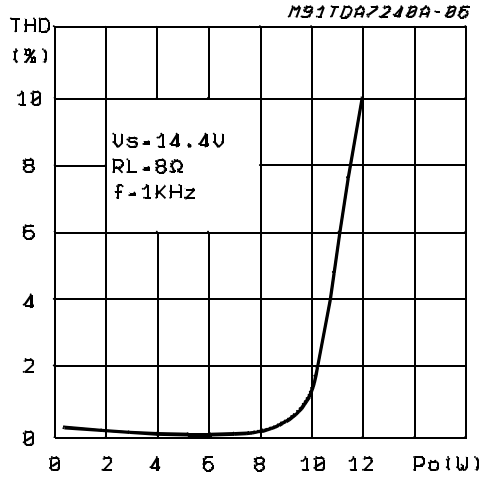

Figure 7 : Distortion vs. Frequency.

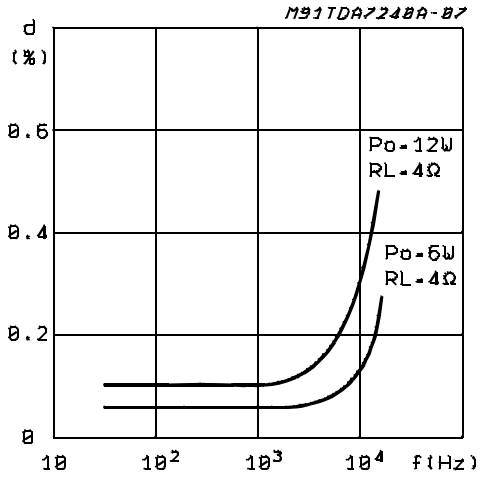

Figure 8 : Supply Voltage Rejection vs. Frequency.

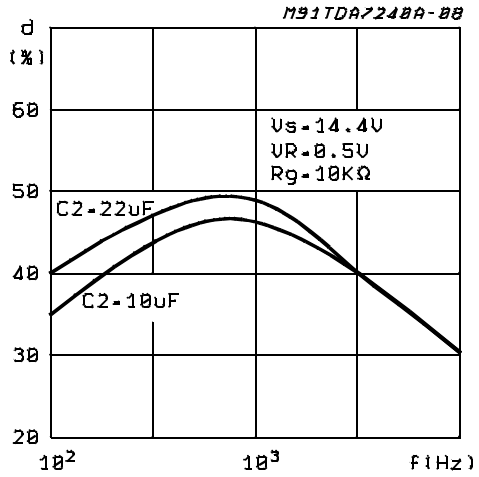

Figure 9 : Power Dissipation and Efficiency vs. Output Power.

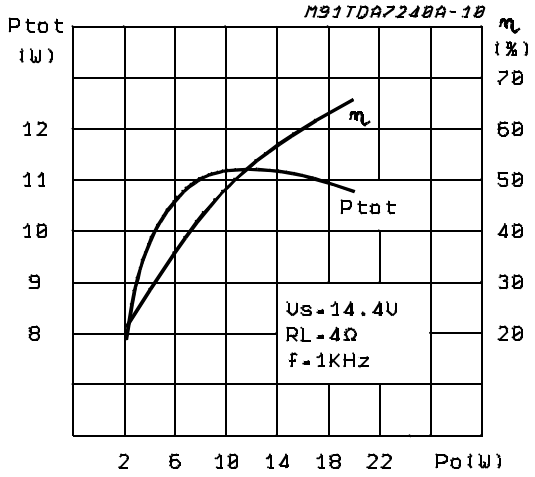

Figure 10 : Power Dissipation and Efficiency vs. Output Power.

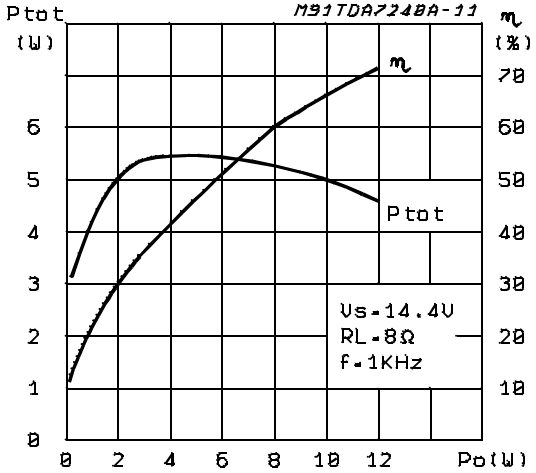

DIM.	mm			inch		
	MIN.	TYP.	MAX.	MIN.	TYP.	MAX.
A			4.8			0.189
C			1.37			0.054
D	2.4		2.8	0.094		0.110
D1	1.2		1.35	0.047		0.053
E	0.35		0.55	0.014		0.022
E1	0.7		0.97	0.028		0.038
F	0.6		0.8	0.024		0.031
F1			0.9			0.035
G	2.34	2.54	2.74	0.095	0.100	0.105
G1	4.88	5.08	5.28	0.193	0.200	0.205
G2	7.42	7.62	7.82	0.295	0.300	0.307
H2			10.4			0.409
H3	10.05		10.4	0.396		0.409
L	16.7	16.9	17.1	0.657	0.668	0.673
L1		14.92			0.587	
L2	21.24	21.54	21.84	0.386	0.848	0.860
L3	22.27	22.52	22.77	0.877	0.891	0.896
L4			1.29			0.051
L5	2.6	2.8	3	0.102	0.110	0.118
L6	15.1	15.5	15.8	0.594	0.610	0.622
L7	6	6.35	6.6	0.236	0.250	0.260
L9		0.2			0.008	
M	2.55	2.8	3.05	0.100	0.110	0.120
M1	4.83	5.08	5.33	0.190	0.200	0.210
V4	40° (typ.)					
Dia	3.65		3.85	0.144		0.152

OUTLINE AND MECHANICAL DATA

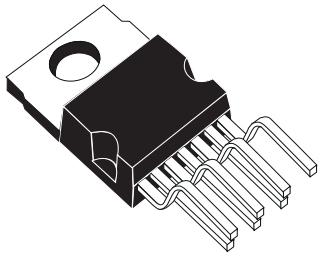

Heptawatt V

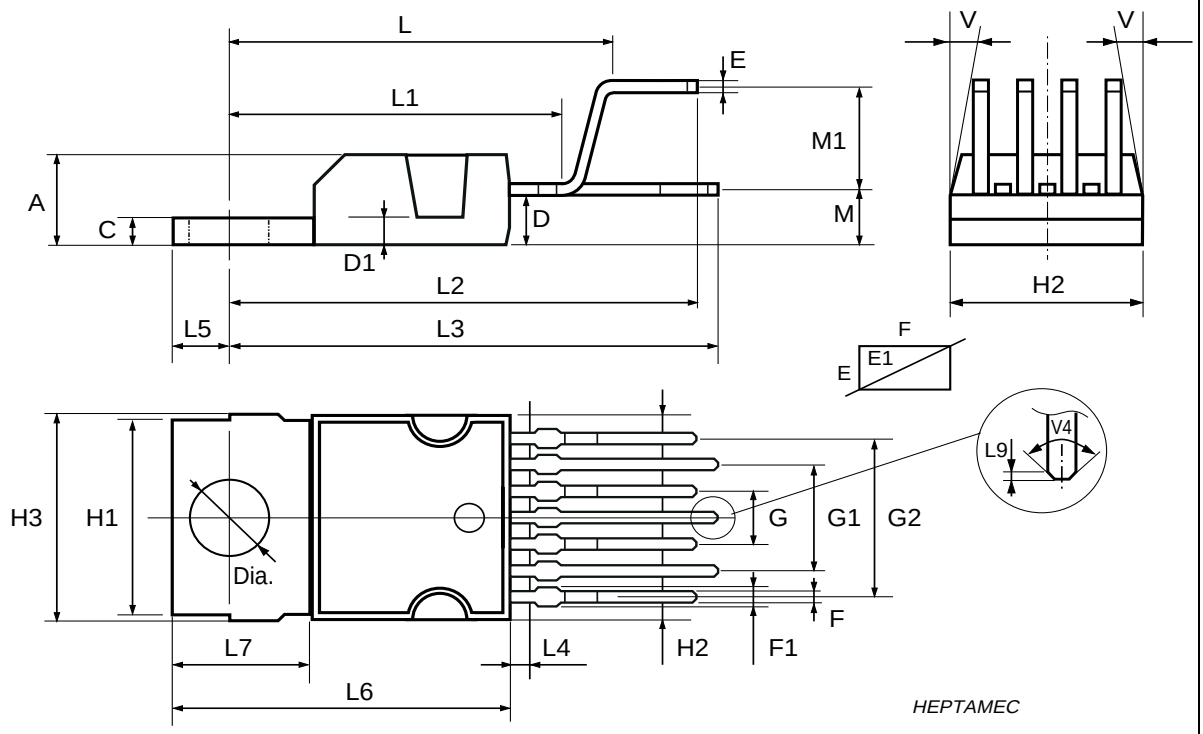

DIM.	mm			inch		
	MIN.	TYP.	MAX.	MIN.	TYP.	MAX.
A			4.8			0.189
C			1.37			0.054
D	2.4		2.8	0.094		0.110
D1	1.2		1.35	0.047		0.053
E	0.35		0.55	0.014		0.022
F	0.6		0.8	0.024		0.031
F1			0.9			0.035
G	2.41	2.54	2.67	0.095	0.100	0.105
G1	4.91	5.08	5.21	0.193	0.200	0.205
G2	7.49	7.62	7.8	0.295	0.300	0.307
H2			10.4			0.409
H3	10.05		10.4	0.396		0.409
L		14.2			0.559	
L1		4.4			0.173	
L2		15.8			0.622	
L3		5.1			0.201	
L5	2.6		3	0.102		0.118
L6	15.1		15.8	0.594		0.622
L7	6		6.6	0.236		0.260
L9		4.44			0.175	
Dia	3.65		3.85	0.144		0.152

OUTLINE AND MECHANICAL DATA

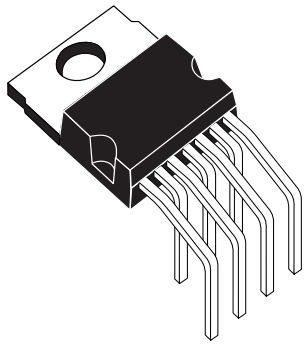

Heptawatt H

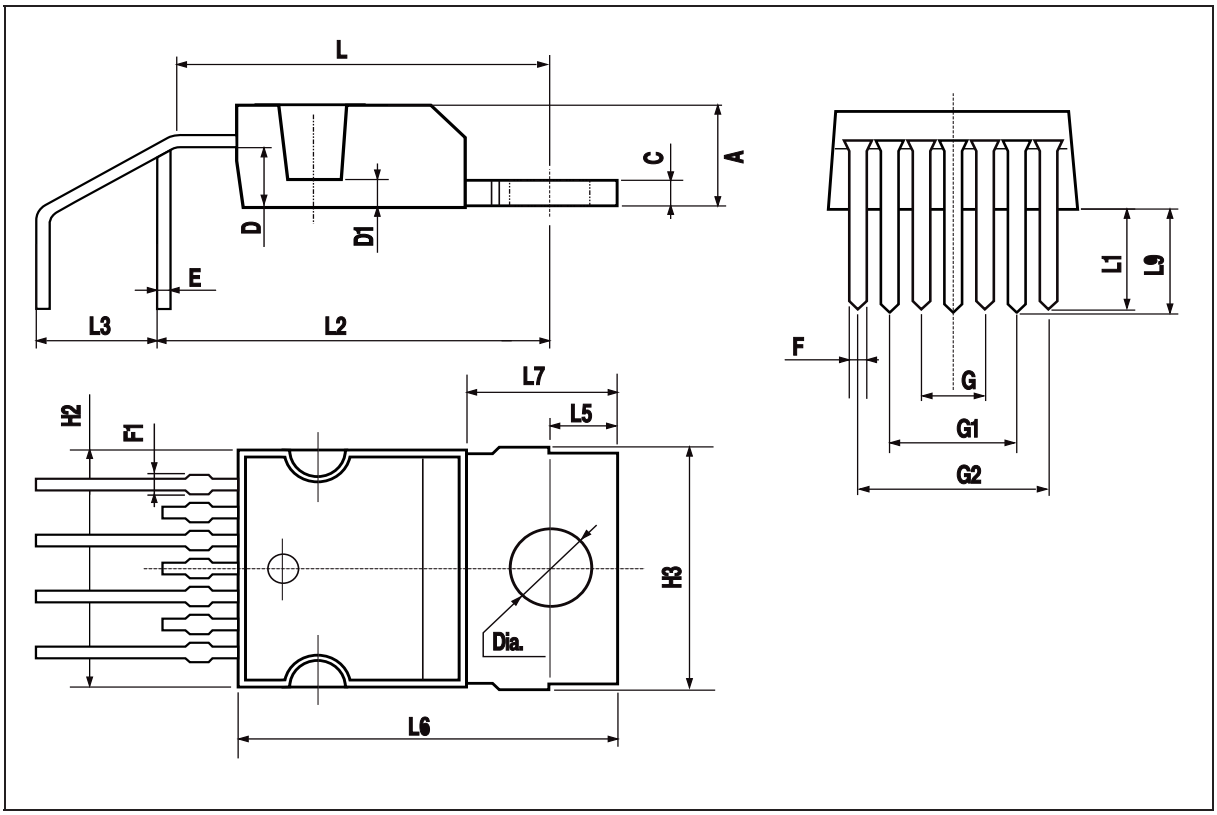

Information furnished is believed to be accurate and reliable. However, STMicroelectronics assumes no responsibility for the consequences of use of such information nor for any infringement of patents or other rights of third parties which may result from its use. No license is granted by implication or otherwise under any patent or patent rights of STMicroelectronics. Specification mentioned in this publication are subject to change without notice. This publication supersedes and replaces all information previously supplied. STMicroelectronics products are not authorized for use as critical components in life support devices or systems without express written approval of STMicroelectronics.

The ST logo is a registered trademark of STMicroelectronics

HEPTAWATT™ is a Trademark of SGS-THOMSON Microelectronics

© 1998 STMicroelectronics – Printed in Italy – All Rights Reserved

STMicroelectronics GROUP OF COMPANIES

Australia - Brazil - Canada - China - France - Germany - Italy - Japan - Korea - Malaysia - Malta - Mexico - Morocco - The Netherlands - Singapore - Spain - Sweden - Switzerland - Taiwan - Thailand - United Kingdom - U.S.A.

http://www.st.com